14' ~~18'~~ Max

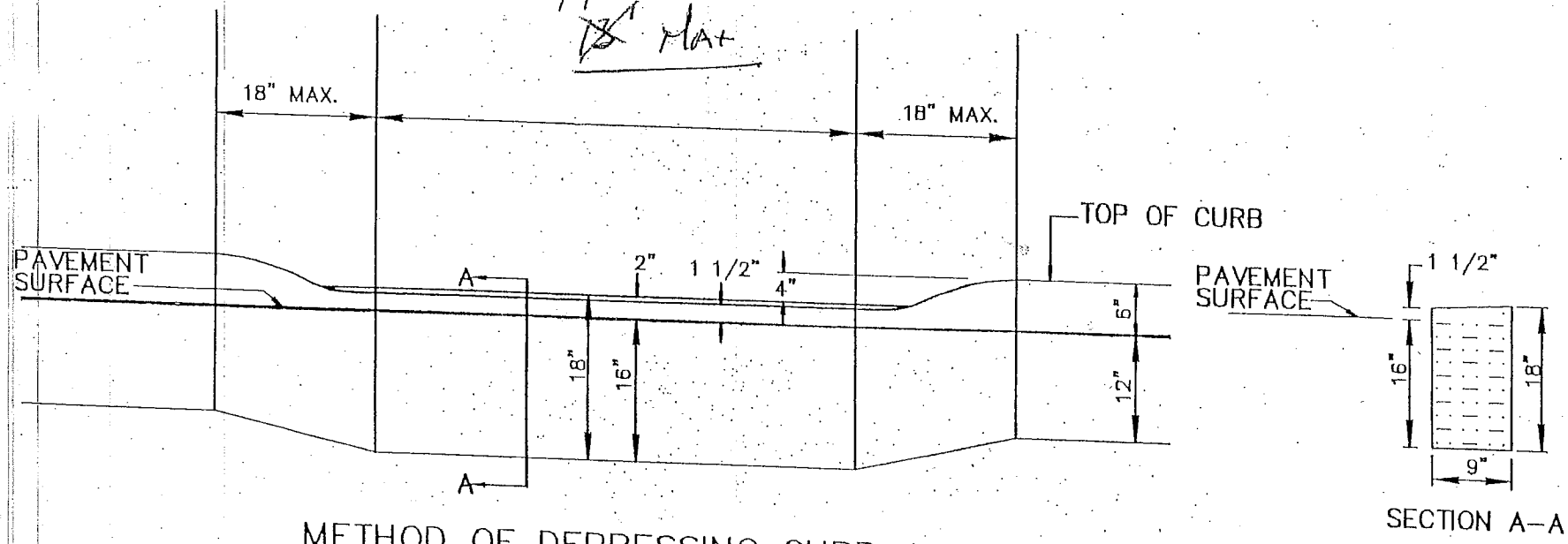

METHOD OF DEPRESSING CURB AT DRIVEWAY

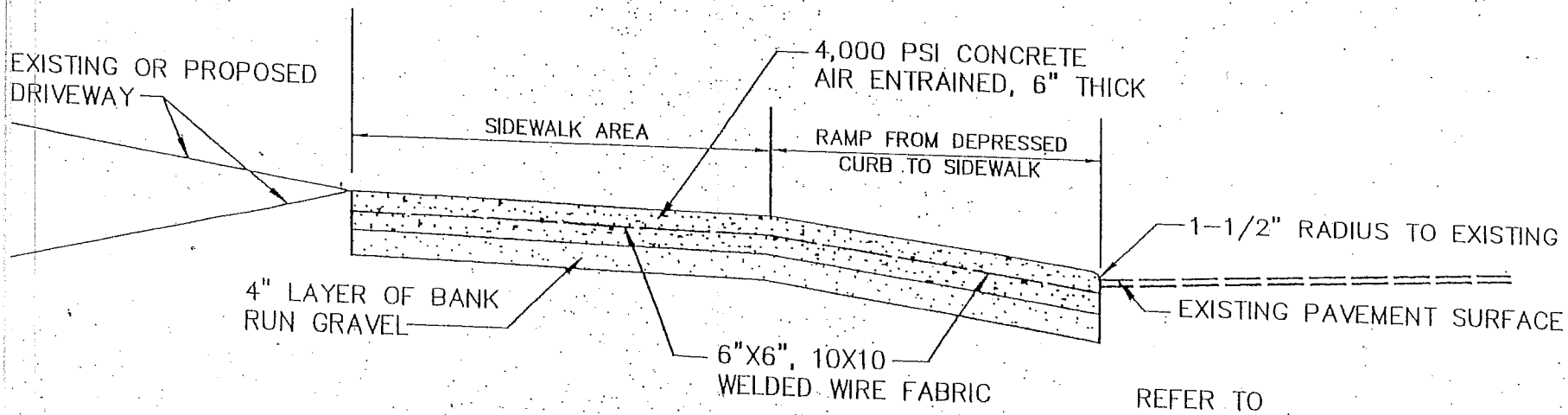

REFER TO "CURB/ROADWAY RESTORATION DETAIL" FOR DISTURBANCE TO EXISTING ROADWAY

CONCRETE APRON DETAIL

NTS